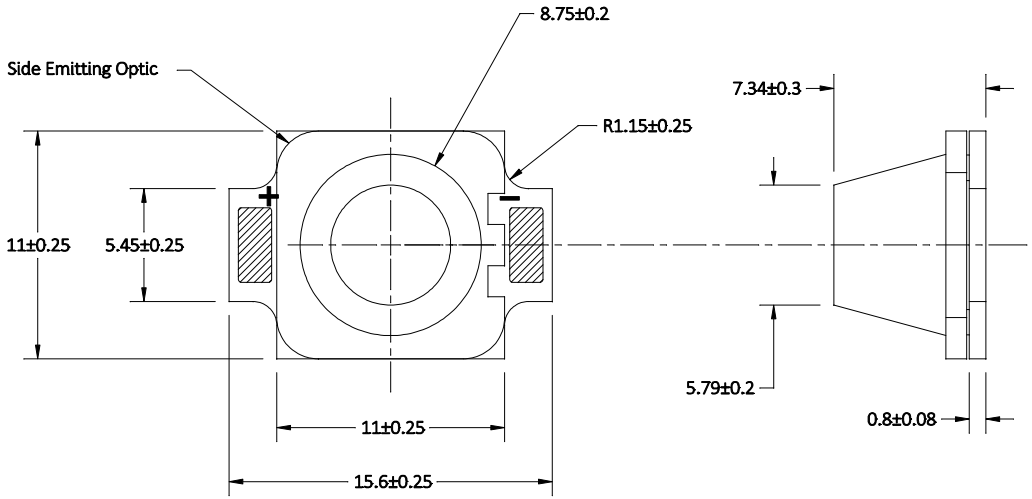

Notes:
Base is SinkPAD-II aluminium MCPCB with white solder mask and black markings.

Assembly must be mounted to a suitable heat sink with a thermally conductive interface material such as our pre-cut thermal adhesive tape. (Part LXT-SR04-10)

Optic fastened to MCPCB base with Loctite 460 cyanoacrylate adhesive.

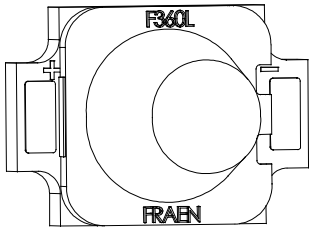

QTY	DESCRIPTION
1	*SP-04 SinkPAD-II MCPCB*
1	*Fraen F360L-3C-S Side Emitting Optic*
1	*Lumileds Rebel LED*

			NAME	DATE
SCALE	**3:1**			
UNITS	**MM**	DRAWN	RW	May 15/14
TOLERANCE	**As noted**	CHECKED	WW	May 28/14
SOLDER	**Kester EM828**	RELEASED		Aug 1/14
REFLOW PROFILE	**Standard**			
QTY PER PANEL	**40**	COMMENTS:		
DEPANELIZED	**Yes**			

Above values unless otherwise noted

DO NOT SCALE DRAWING

Quadica Developments Inc.

PROJECT

SP-04 SinkPAD-II
Rebel Side Emitting LED Assembly

Luxeon Star LEDs

DWG: **SP-04-Assembly.dwg** | PART: **SP-04-XX** | REV: A

PROJECT ID: | SHEET 1 OF 1

A4